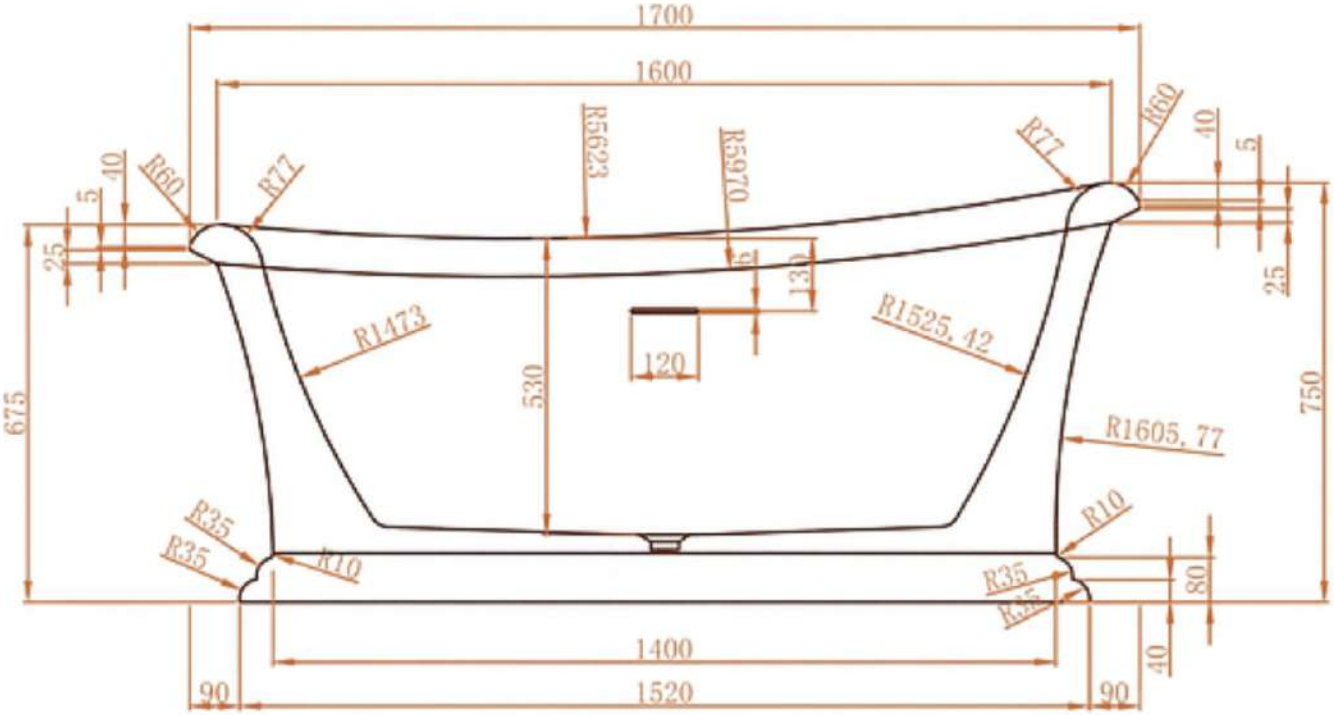
1700
1600
R5623
R5970
R60
R77
40
5
25
130
120
R1473
R1525.42
530
675
750
R1605.77
R35
R10
80
1400
1520
90

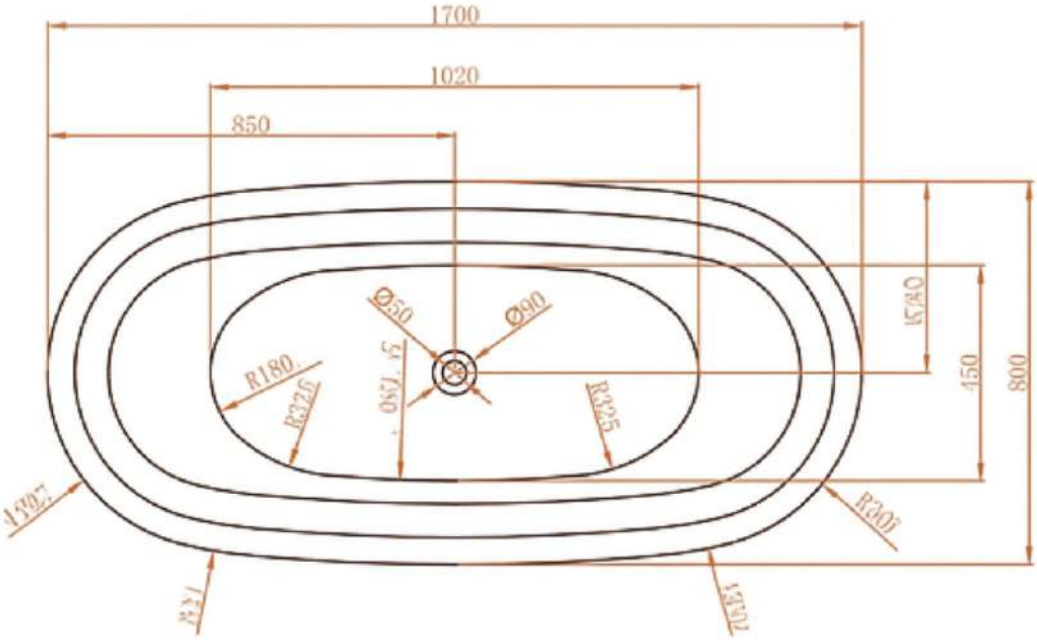
1700
1020
850
Ø50
Ø90
R180
R326
R325
450
800
R31

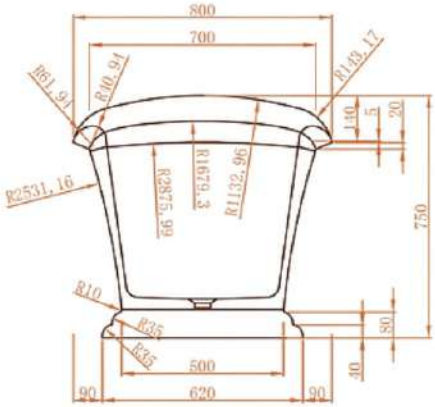
800
700
R61.91
R40.91
R143.17
140
5
20
R2531.16
R1132.96
750
R10
R35
80
500
620
90
40